Vega 50 FXO

Vega 50 FXO features

- Desktop or 19” rack mount
- 2 models
  - 8 ports
  - 10 ports
- Loop start signaling
- Supports line current reversal detection (answer and disconnect indication)
- Support loop current disconnect detection (disconnect indication)
- Inbound FSK Caller ID (sdmf and mdmf)
- Ports have configurable line impedance (10 port unit only)
- 600R (HCMRR) or CTR21 variants (8 port unit only)

Vega general product features

- SIP or H.323 supported (choice by firmware download)
- Web browser configuration
- 10 base T / 100 base TX LAN
- QOS packet marking
  - layer 3 Type Of Service
  - layer 2 802.1 p/q
- Call detail records available
  - from Telnet and Serial interfaces
  - via Radius accounting records
- Built in dial planner
- SNMP
- Auto-load config and firmware

Vega VoIP features

- Echo cancellation
  - G.168 – up to 32ms (R6 up to 128ms)
- Codecs / companders
  –G.711Alaw64k
  –G711ulaw64k
  –G729AnnexA (/b)
  –G.723.1
  –T.38
- Silence suppression configurable per codec

Environmental

- Operating temperature: 0ºC to +40ºC
- Storage temperature: -20ºC to +70ºC
- Humidity: 0 to 90% (non condensing)

Power

- 100 - 260 Vac, 47 - 63 Hz, 1A - 0.5A
- Fuse rating: 2A - type T (e.g. Bussmann S505)

Physical dimensions

- 440mm (17.4") x 63mm (2.5") x 330mm (13") width / height / depth
- Industrial rack mount: 483mm (19"), 1.5U
- Weight: 7.5kg

Front view of Vega 50 FXO gateway

Rear view of 8 port FXO gateway

Rear view of 10 port FXO gateway

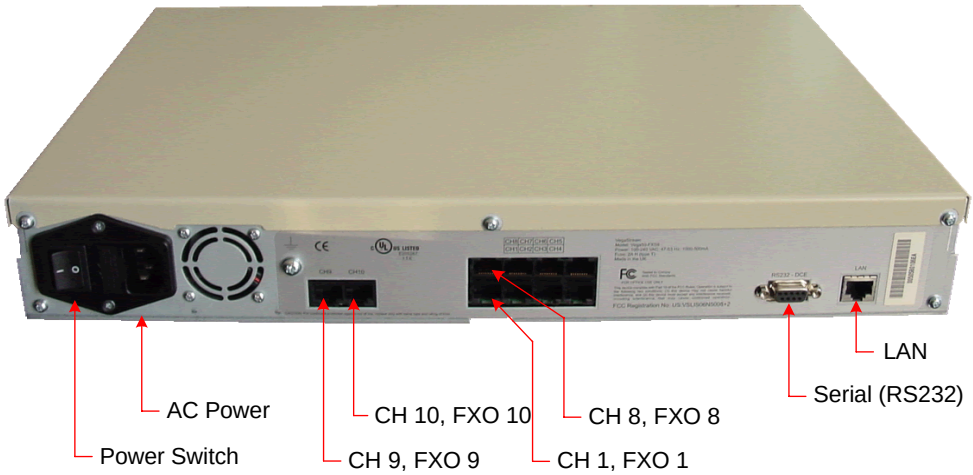

Typical FXO configuration

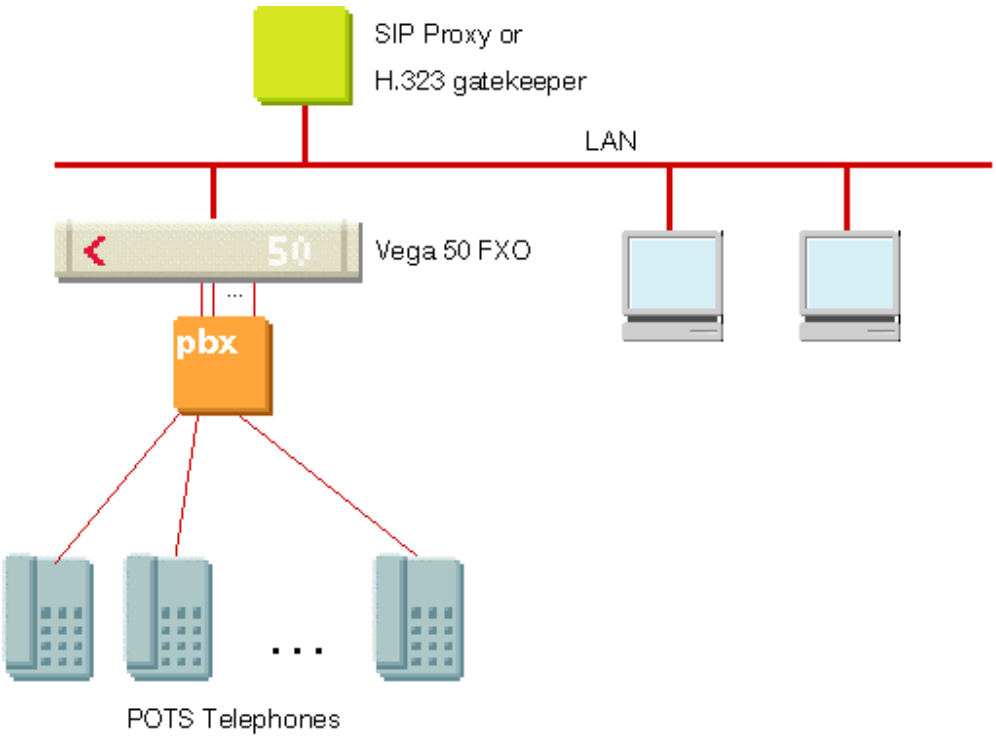

Approvals

- Approved for North America
  Safety – UL60950
  EMC – FCC part 15 class A
  Telecomms – FCC part 68, CS-03

- Approved for European CE Countries
  Safety – EN60950, IEC60950
  EMC – EN55022 class A (CISPR22), EN55024(CISPR24)
  Telecomms – TBR21 (Euro Analogue PSTN)

- Approved for Australia / New Zealand
  Safety – AS/NZ60950
  EMC – AS/NZS 3548 Class A

Tech Spec

- Physical

  600 R HCMRR and CTR21 variants (8 port gateway)
  600R, CTR21, 900R configurable (10 port gateway)
  REN 0.5

- Signalling

  Loop start
  DTMF outdial
  Loop current disconnect cleardown
  Line current reversal

Vega pinouts

The pinout of the Vega 50 is as follows:

Vega 50
4 (Ring)
5 (Tip)

The order of the telephone interfaces - looking from the rear of the Vega - is bottom left to top left anticlockwise, as shown below:

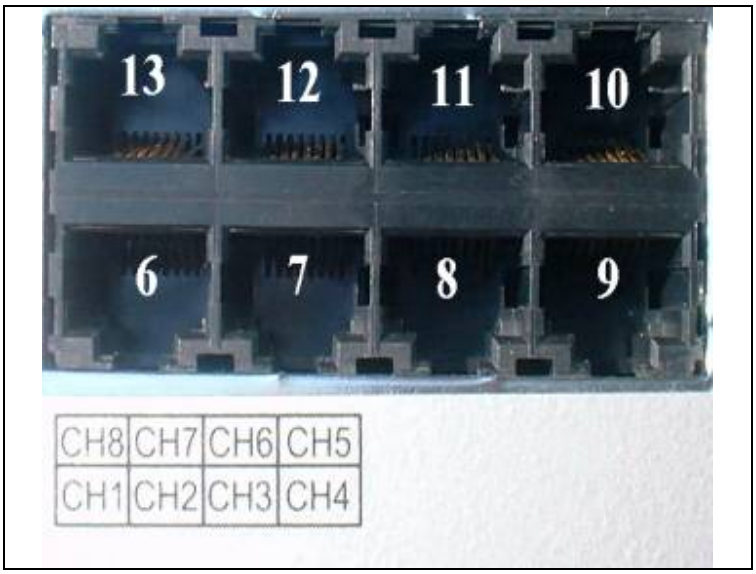

Cables with RJ45 sockets are used to connect the Vega to a Ethernet LAN hub. A standard 1:1 cable is required.

Ethernet
1 (Tx+)
2 (Tx-)
3 (Rx+)
6 (Rx-)

To Make LAN cables for Vegas use the following parts (or similar):

Component	Part number	Description	Manufacturer
Cable	Belden 9804	Cat 5 S-FTP 2 Twisted Pair Cable (UL2960)	Belden www.belden.com
RJ45 connector	Stewart 360808A217	RJ45 Screened plug	Stewart www.stewartconnector.com
RJ45 boot	Stewart 361010SRX225A256	RJ45 UL approved yellow strain relief boot	Stewart www.stewartconnector.com
Ferrite	Stewart 28B0562-200	EMI suppression ferrite core (solid, loose)	Stewart www.stewartconnector.com
Heat-shrink sleeve	TAKBRO CPA-100-13/4	Adhesive heatshrink (13mm od, 3:1) black UL224, MIL-1-23053	TAKBRO www.takbro.co.uk

Note:

1. When connecting the cable to the RJ45 connector ensure that there is 360˚ contact between the cable's braided screen and the RJ45 screen.
2. EMI suppression ferrite is to be fitted within 2mm +/- 2mm of the RJ45 connector boot – on the end that connects to the Vega.